Lite2Sound QB

Auto Gain Photodiode Amplifier

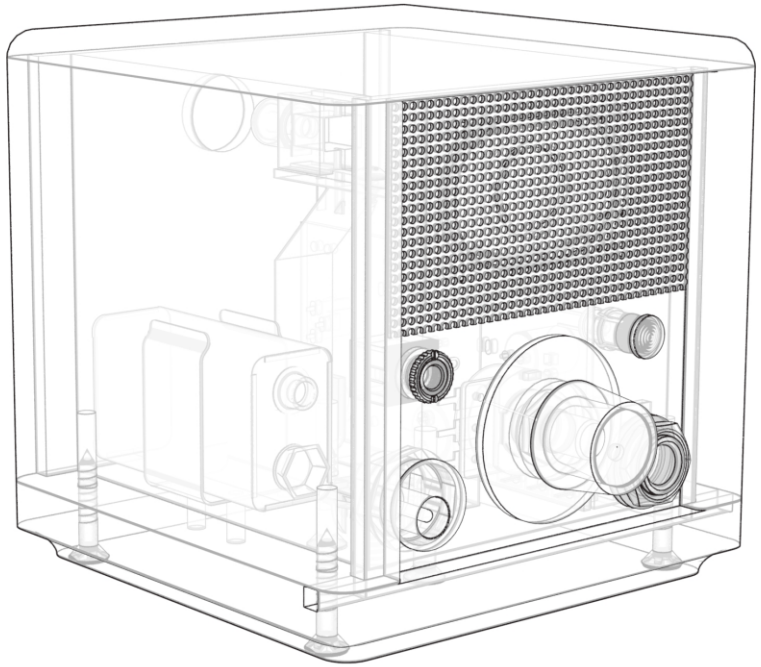

What is Lite2Sound QB?

Lite2Sound QB is a portable audio device for receiving modulated light. It is made specially for creative audio enthusiasts, sound designers, music producers, and performing artists. Imagine accessing ambient music that is previously unheard, yet full of accidental beauty and strange textures.

With Lite2Sound you'll uncover hidden sources of audio frequencies that are all around us waiting to be discovered. That's because the technology behind modern high-tech light sources is often flickering at frequencies too fast for our eyes to see, yet within our hearing range - if we only had a way to listen. That's what Lite2Sound does. It reveals these invisible tones to your ears and lets you blend the frequencies into chords as you move it through space and aim it like a camera.

The wooden case design is inspired by vintage radio receiver sets. It offers a classic yet low-key appearance that won't arouse distracting attention when used for field recordings. Its built-in speaker and battery means no hassles from plugs and cables.

Suggested listening

Begin by exploring around the home. Try video screens, displays, digital toys, etc.

Public spaces that are saturated with technology provide many interesting sounds: arcades, midways, toy stores, video showrooms, casinos, LED light art installations, etc.

Night time driving in the city gives an ever changing soundscape with surprises.

For best sound quality, use it at night and aim it away from background lighting. Sunlight increases the noise floor. AC grid-powered light bulbs add mains hum harmonics.

Audio connections

The 3.5mm jack is a mic-level audio output that can be connected to the stereo mic input of a camcorder or portable audio recorder. This is a direct output (pre-limiter). Use a shielded audio cable for best sound quality.

The 1/4" jack is a line level output, and is post-limiter. Plugging into this jack will mute the internal speaker. Connect it to any audio device with a 1/4" line input. You can also plug in headphones, but note that audio will only be heard on one side of the headphones.

Power supply

Use the internal 9V battery, or connect an AC adapter to the power input jack. This unit requires a 9 VDC regulated power source with tip positive polarity. It is protected against reverse polarity and over-voltage.

Tripod mount

A standard camera tripod mount is built in to the base. Mounting it on a tripod makes it easy to position and focus on interesting sources.

What's new in this version?

Lite2Sound QB contains several refinements that distinguish it from the previous versions we have offered. Like the PX model, QB has automatic exposure control so it can work well in either bright or dim light conditions, without changing any settings. The QB also includes an audio limiter for smoother sound quality and low distortion.

The QB has a built in copper foil shield to prevent electromagnetic interference from contaminating the audio.

Additionally, the QB has a direct audio output for connecting to the mic input jack of video recorders. This output bypasses the power amplifier and AGC limiter circuitry, allowing the best dynamic range and lowest noise floor.

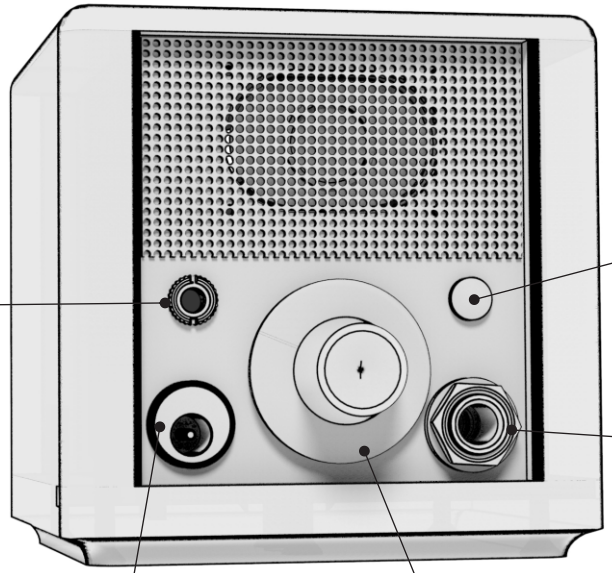

Headphones or **Direct Output**
(selector switch inside)

For recording, select Direct Out mode,
and connect this jack to **Mic In**
of your recording device

Power LED

Line Output
1/4" mono
-10dBu
(post-limiter)

Connect to
mixer, effects, amplifier, etc.

AC Adapter
9 VDC
– ⊖ +

Volume Limiter
and ON/OFF switch

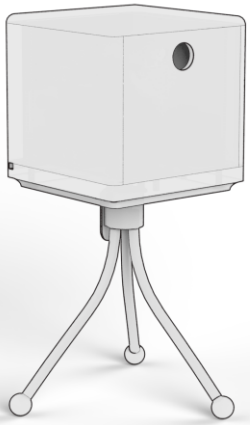

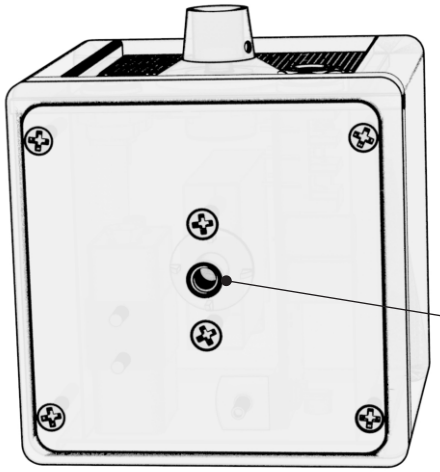

Tripod mount
1/4-20 thread

Sensor window

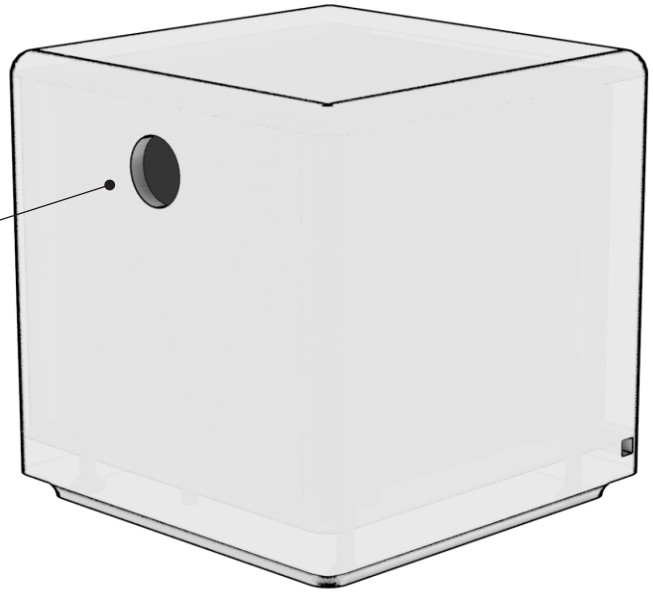

Automatic gain (x2)

Lite2Sound QB has two automatic gain control (AGC) circuits. They work together to provide the fullest signal level without distortion.

The first AGC layer adjusts for variations in brightness. Think of it like automatic exposure control in a camera.

The second layer of AGC adjusts for variations in modulation intensity of the source you are monitoring. It works like an audio limiter or compressor, preventing the output form distorting even if there are large changes in the input signal level.

Just one knob

The control knob sets a limit for the maximum loudness of the speaker.

Under some conditions, turning the knob won't affect the speaker loudness (don't assume the unit is broken). If the unit is not receiving a strong signal, such as in darkness, then the knob may have little or no effect on volume.

To minimize the AGC effect, turn the knob up to its maximum. That will give the most dynamic range.

3.5mm Audio Output

The 3.5mm jack can be used either for headphones or as a Direct Out for recording. Use the internal switch to set the appropriate function before your session. The location of the switch is illustrated below.

3.5mm jack function switch

UP: Headphones
DOWN: Direct Out

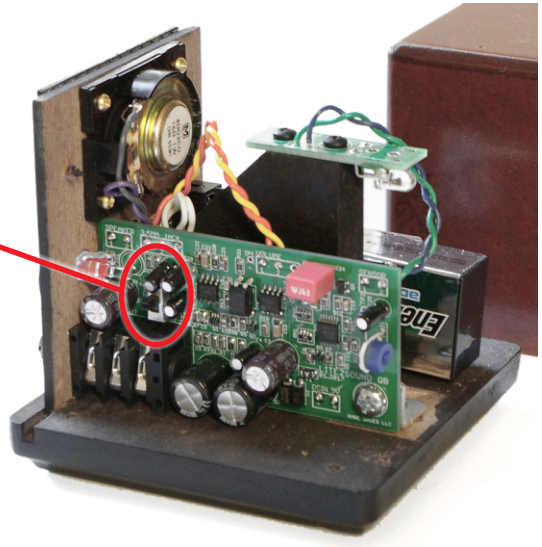

Recording tips

For best recording quality, use the 3.5mm jack in Direct Out mode. This provides the lowest noise floor and best dynamic range. The signal is low level and requires a microphone preamplifier. This output is not affected by the volume limiter.

The 3.5mm jack will deliver a dual mono signal to the stereo mic input of your camcorder or other recording device. It is an unbalanced output. Use either a mono (TS) or stereo (TRS) type cable. Shielded cable is required.

If connecting to pro audio equipment, you can use a DI box, ¼" Hi-Z instrument input, or an adapter cable with XLR male output, as required to match your mic preamp's input connector.

During recording, you can mute the internal speaker by patching something to the ¼" jack. Either connect headphones, or "dead-patch" it with a headphone adapter plug.

For best results with a battery-powered recording device, don't use the AC adapter to power Lite2Sound QB. Use the internal 9 volt battery instead.

AC Adapter tips: Grounding

When using the AC adapter, there can be unwanted noises in the output if your audio system is not grounded. At least one device in your signal chain (mixer, powered speakers, computer, etc...) needs to have a 3-prong AC plug for proper grounding. Without it, the system is 'floating' and can suffer from excessive background noise.

1/4" Audio Output

The 1/4" audio output jack is useful for connecting to effects, a mixer, or an amplifier.

Normally, you should set the volume limiter control to maximum when using the 1/4" jack as a line output. This gives the most dynamic range.

Q&A

Q. Can I use it with a laser pointer to hear vinyl records?
A. Yes, but only in low quality. It helps to focus the laser to a pinpoint with a small convex lens (not included). Spin the vinyl on a turntable and reflect the laser spot off of it. Monitor the reflected flickering laser light with Lite2Sound. Additionally, many textured surfaces can make audio if they are in motion while the laser is reflected off of it.

Q. Can I hear sounds from nature with Lite2Sound?
A. Yes, sometimes. On a clear day, you can hear air moving in the atmosphere if you aim Lite2Sound in the direction of the sun. Humming of insect wings can be heard if light is striking them. It works best if you don't point Lite2Sound directly at the sun, just tilt it off-axis slightly. Any shiny vibrating object which reflects the sun on a clear day is a potential source of audio.

Q. Can I hold it up to a telescope and hear sounds from outer space?
A. No. That requires extreme sensitivity which it is not designed for.

Q. Can I locate infrared motion detectors and other IR sources with it?
A. Yes, sometimes. It will not react to passive infrared sensors, but active infrared motion detectors such as found in home thermostats are easy to locate because they emit bright pulses of infrared, making a distinct clicking sound. Since Lite2Sound receives near-infrared as well as visible light, it will respond to many infrared remote controls and modulated IR communication signals.

Q. Can I use it as an optical pickup for stringed instruments?
A. Yes, but only for low fidelity experimental purposes because you'll need 3 or 4 hands. Focus a bright LED flashlight on the strings, and point Lite2Sound at it. Works best with a black guitar, or place a square of black paper behind the strings.

Q. What does pure unmodulated light sound like?
A. Light that is not flickering at all, such a flashlight running on batteries, is heard as pink noise or static.

Q. Can I hear colors with it?
A. No. It responds to variations in brightness of light, but does not distinguish between colors.

Q. Could it work as a free space optical communication receiver or photophone?
A. Yes, it could work as a photophone receiver, if you carefully add a focusing lens or optics to make it more directional. Note that Lite2Sound QB only receives, it does not transmit.

Q. Can I make a laser microphone with it for eavesdropping on conversations?
A. This device is not intended for surveillance. We have not tested this application.

General care

The case of Lite2Sound QB is made of eucalyptus wood fiberboard, and is not meant to be moisture resistant. Avoid condensing humidity and damp conditions.

Changing the battery

The unit is powered by a standard 9V alkaline battery. Before you begin, move to an uncluttered table top with good lighting.

Turn the unit upside down and remove the four screws at the corners with a Philips screw driver. Gently slide the top half of the case off of the base. The illustration on this page shows how the lid separates from the base.

The lid is tethered to the base by a ground wire. Don't pull on the ground wire, or the copper shielding may tear off.

The groove that the control panel slides in is fragile. Be careful not to break the thin edge of wood around the groove.

Slip the old battery out of the battery clip, then install a fresh battery. Slide the two halves of the case back together, and replace the four screws. Don't over-tighten.

AC adapter

The unit can be powered with a 9 volt DC adapter. The polarity of the plug is tip positive. A regulated type adapter is recommended. (For best sound quality use battery power)

Lite2Sound QB will not work with tip-negative AC adapters for FX pedals.

This unit is protected against reverse polarity and over-voltage. If you connect an unregulated type AC adapter, or one that delivers more than 10 volts, an internal fuse will activate. The fuse disconnects the power supply to prevent damage. If this happens, wait a few minutes for the fuse to reset itself, then try a different adapter or battery.

Specifications

Dimensions..... 3.5" (89 mm) cube
Weight.....14 oz (400g)
Sensor type..... .PIN photodiode
Sensor reception angle.....8 degrees
Wavelength sensitvity.....450 - 1100nm (blue to near-IR)
Audio outputs.....3.5mm dual mono (mic level), 1/4" mono (-10 dBu)
Power source..... 9 V battery or AC Adapter
AC adapter..... 9 VDC output, regulated, tip positive, 2.1mm plug